# PART NO.: 060-R88-T-50-C6

* EIGHT CONDUCTOR MODULAR PLUG
* FOR HIGH SPEED APPLICATION
* FOR CONDUCTORS WITH AN O.D. RANGE OF .037/.042
* USES .012 CONTACT
* PRODUCT REQUIRES A LOAD BAR
* CERTIFIED FOR QUABBIN DATAMAX® 6 CORDS

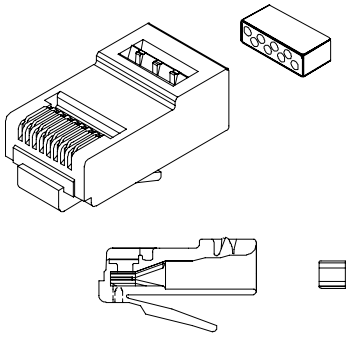

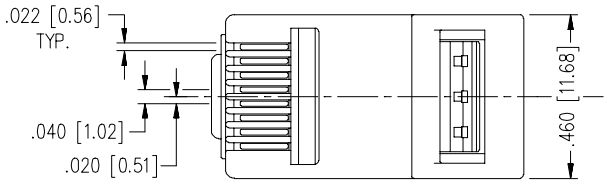


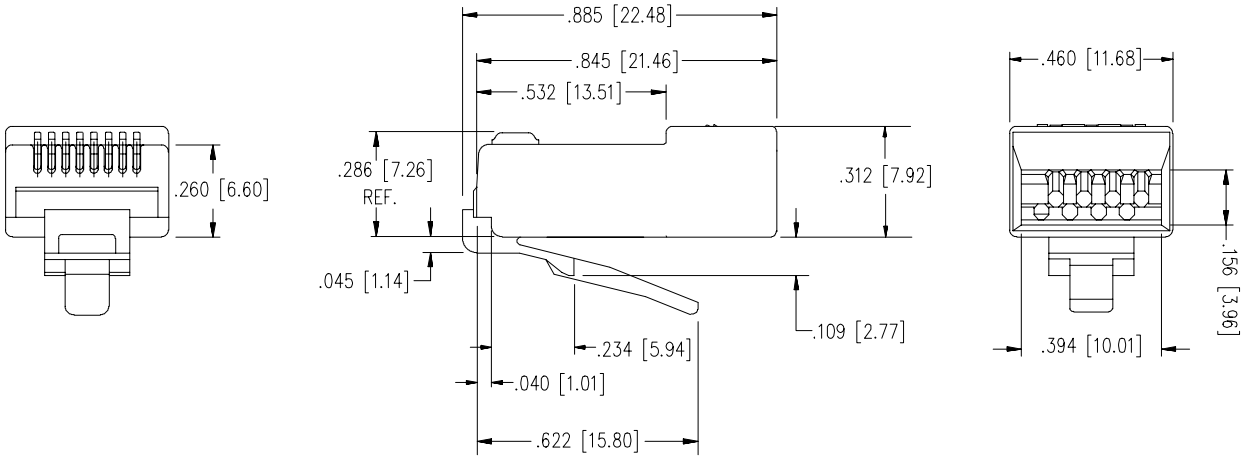


PERFORMANCE:

| | |
|---|---|
| CONTACT MATERIAL: | PHOSPHOR BRONZE – .012 THK |
| CONTACT PLATING: | 50 MICRO-INCH : OTHER PLATING OPTIONS AVAILABLE<br>SELECTIVE 24 CARAT HARD GOLD PLATE IN CONTACT AREA<br>OVER 100 MICRO-INCH MINIMUM NICKEL PLATE<br>PER CURRENT SELECTIVE GOLD PLATING REQUIREMENTS. |
| PLUG MATERIAL: | POLYCARBONATE |
| PLUG TOLERANCES AND DIMENSIONS: | COMPLIES WITH F.C.C REQUIREMENTS |
| FLAME AUTO EXTINGUISH | 94-V0 – File# E188111 |
| OPERATION TEMPERATURE: | -40°C TO +70°C |
| INSERTION/EXTRACTION LIFE: | 1000 CYCLES |
| CONTACT RESISTANCE: | 10 MILLOHMS MAX. |
| CURRENT/VOLTAGE: | 30 VAC/42 VDC AT 1.5 AMPS |

RoHS COMPLIANT

SD000097