THIS DRAWING IS UNPUBLISHED. RELEASED FOR PUBLICATION ,19 .
© COPYRIGHT 19 BY AMP INCORPORATED. ALL INTERNATIONAL RIGHTS RESERVED.

LOC	DIST	P	F
AA	22		

REVISIONS

ZONE	LTR	DESCRIPTION	DATE	APPD
	C	OBSOLETE: S/S; EC 0502-0827-97	19MAY98	DD BL

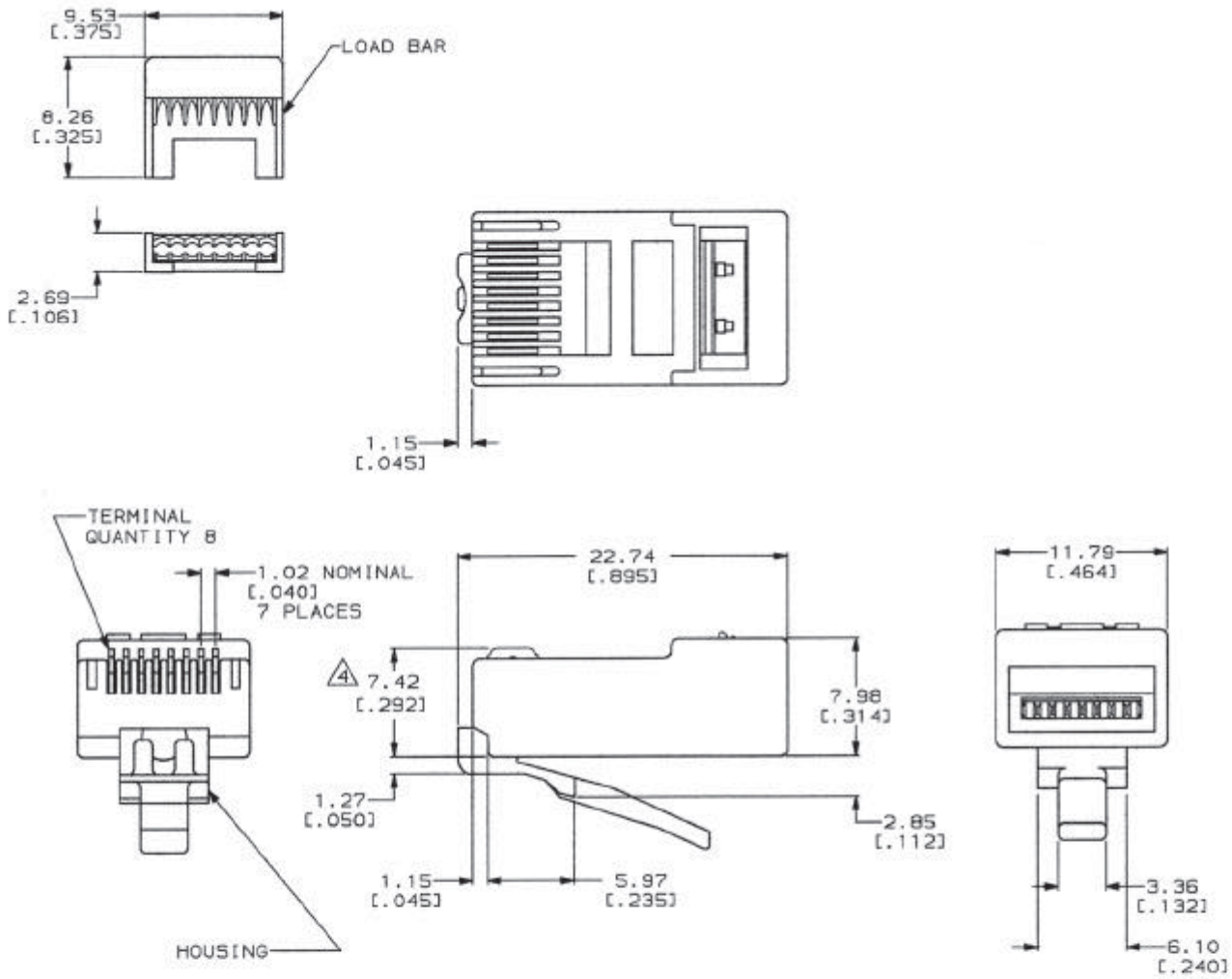

1. MATERIAL: HOUSING-POLYCARBONATE,CLEAR. TERMINAL-0.36[.014] THICK PHOSPHOR BRONZE PLATED WITH 1.27µm[.000050] MINIMUM THICK GOLD IN LOCALIZED AREA, GOLD FLASH OVER THE REMAINDER, OVER 2.54µm[.000100] MINIMUM THICK NICKEL UNDERPLATE. LOAD BAR - PBT POLYESTER, BLACK.

2. DIMENSIONS ARE MAXIMUM UNLESS OTHERWISE SPECIFIED.

3. PLUG WILL ACCEPT A 24 AWG STRANDED CONDUCTOR, PROVIDED THE INSULATED CONDUCTOR DIAMETER IS LESS THAN OR EQUAL TO 0.99 [.039]; WITH A MAXIMUM CABLE JACKET DIAMETER OF 5.59 [.220], MINIMUM 4.83 [.190].

4. TERMINATED DIMENSION 6.15[.242] MAXIMUM.

5. PACKAGED 500 ASSEMBLIES AND 500 LOAD BARS PER CARTON.

6. PACKAGED 100 ASSEMBLIES AND 100 LOAD BARS PER BOX.

7. PACKAGED 25 ASSEMBLIES AND 25 LOAD BARS PER BAG.

8. PACKAGE 10,000 ASSEMBLIES AND 10,000 LOAD BARS PER BAG.

PACKAGED	PART NUMBER
7	5-558530-4
6	5-558530-3
5	5-558530-2
8	5-558530-1

DO NOT SCALE PRINT.
UNLESS SPECIFIED
DIMENSIONS IN mm [INCHES]
TOLERANCES ON :
2 PLC DEC ± -
3 PLC DEC ± -
ANGLES ± -
2

MATERIAL 1

FINISH 1

DR 5-31-94 T. WOOTEN
CHK 7-13-94 D. HUSSEY
APPD 7-20-94 E. LAURER
APPD 7-20-94 H. MCGRATH
PRODUCT SPEC 108-1163
APPLICATION SPEC 114-6053
WEIGHT -

Tri-Net Technology / U.S.A.

NAME
MODULAR PLUG ASSEMBLY, 8 POSITION, ROUND CABLE, STRANDED WIRE

SIZE	CAGE CODE	PART NUMBER
C	00779	060-R88-T-50-C5

SCALE 4:1 SHEET 1 OF 1

RoHS COMPLIANT

THIS DRAWING IS A CONTROLLED DOCUMENT FOR AMP INCORPORATED. IT IS SUBJECT TO CHANGE AND THE CONTROLLING ENGINEERING ORGANIZATION SHOULD BE CONTACTED FOR THE LATEST REVISION.