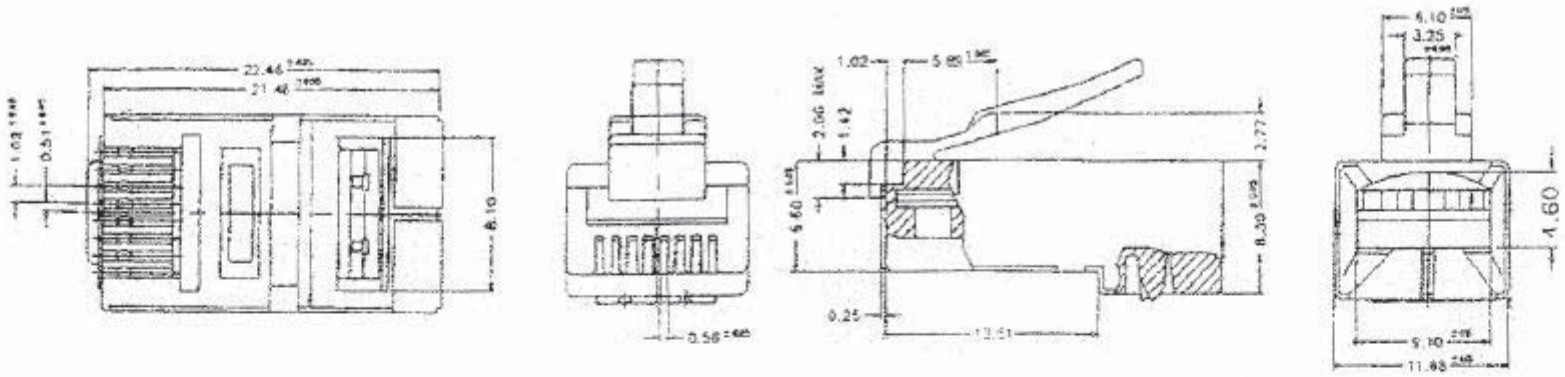

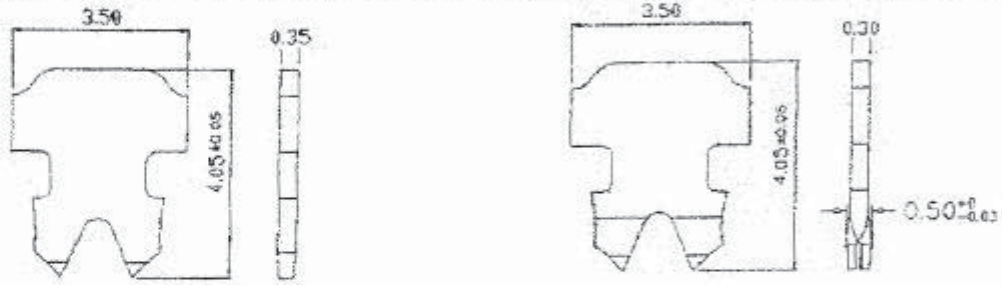

" " : 2 PRONGS FOR STRANDED WIRE
多芯線用二叉型金片 (060-R88-T-50-SH)

"2" : 2 PRONGS FOR SOLID WIRE(SS)
單芯線用大拐角型金片 (060-R88-S-50-SH)

☐Standard Logo : ☐Special Logo : _____ ☐Blank

#T8TR B — C D E

- 鍍金厚度 Gold plating(A,B,C,D,E)
- 金片型式 Contacts type(blank,2,3)
- 塑膠材質 Housing Material(0,2)
- 商標 Logo(COB,other or blank)

產品編號 ITEM No.

UL 94V-0	☐#T8TR-0A	☐#T8TR-02A	☐#T8TR-03A	3μ"
	☐#T8TR-0B	☐#T8TR-02B	☐#T8TR-03B	6μ"
	☐#T8TR-0C	☐#T8TR-02C	☐#T8TR-03C	15μ"
	☐#T8TR-0D	☐#T8TR-02D	☐#T8TR-03D	30μ"
	☐#T8TR-0E	☐#T8TR-02E	☐#T8TR-03E	50μ"
UL 94V-2	☐#T8TR-2A	☐#T8TR-22A	☐#T8TR-23A	3μ"
	☐#T8TR-2B	☐#T8TR-22B	☐#T8TR-23B	6μ"
	☐#T8TR-2C	☐#T8TR-22C	☐#T8TR-23C	15μ"
	☐#T8TR-2D	☐#T8TR-22D	☐#T8TR-23D	30μ"
	☐#T8TR-2E	☐#T8TR-22E	☐#T8TR-23E	50μ"

UL94V-0
50M" GOLD

UNIT: m/m

RoHS COMPLIANT

UNIT m/m	DSGN		PART NUMBER 060-R88-S-50-SH
	CHK		
SCALE 4/1	APPR		DATE 03/17/99
DWG NO.			

Tri-Net Technology / U.S.A.