REVISIONS				
ZONE	REV	DESCRIPTION	DATE	APPROVED

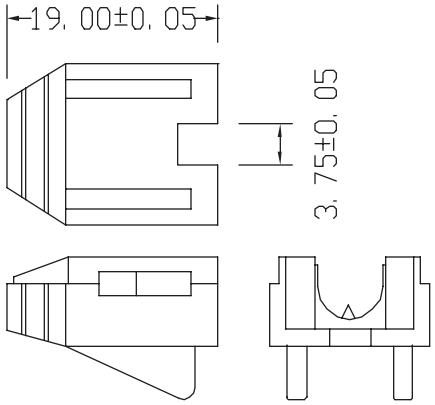

BODY X 1

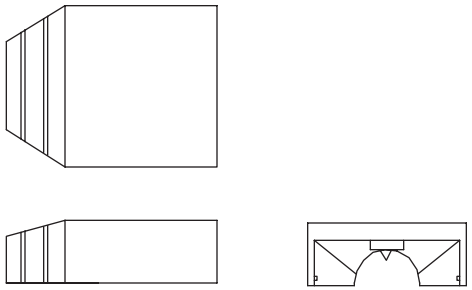

COVER X 1

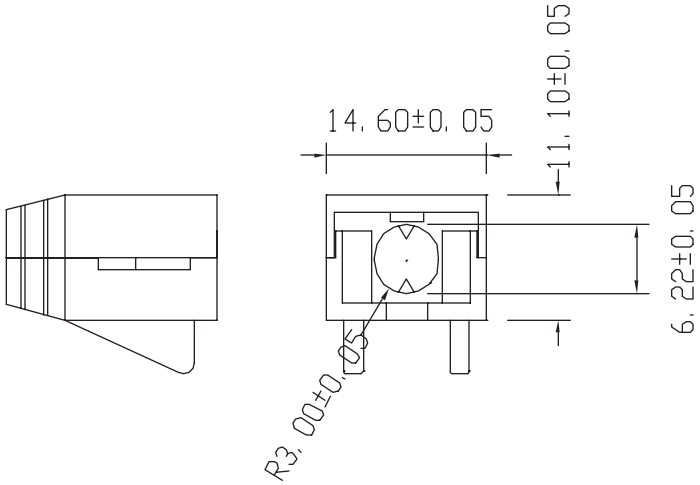

VIEW AFTER ASSEMBLIED

MATERIAL: PC
COLOR: BLACK
OPTIONS: BLUE,BROWN,GREEN,GREY
IVORY(I-2),ORANGRE,RED,
WHITE(W4),YELLOW,PURPLE.

THIS S.R USE FOR RJ45 8P8C PLUG
WITH ROUND CABLE.

RoHS COMPLIANT

SSHEET OF	ALL COPY RIGHTS RESERVED	
SIZE A4	Tri-Net Technology/USA	
DIA mm		
DATE MAY.29.96'	PART NUMBER 060-MPSR-8-YY	
DWG FILE S0018		
DESIGN	DRAWN	CHECKED