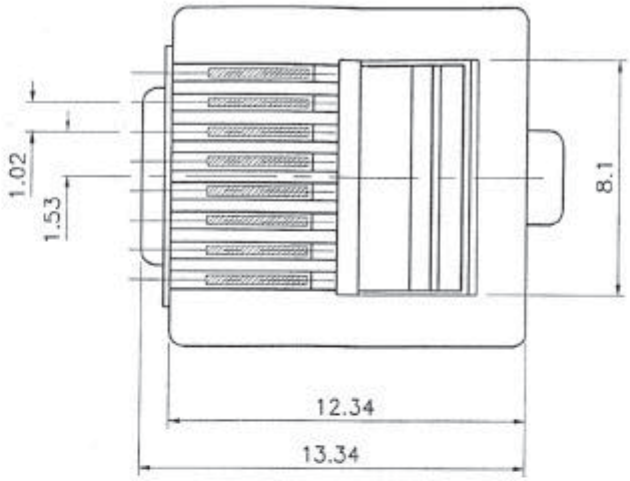

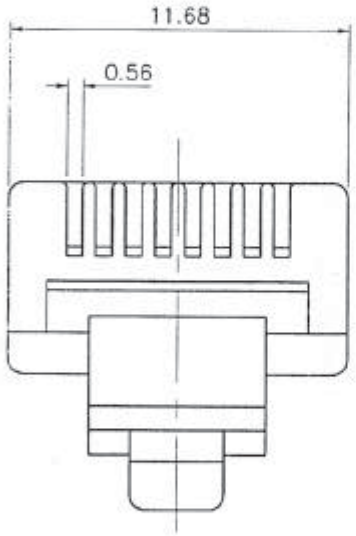

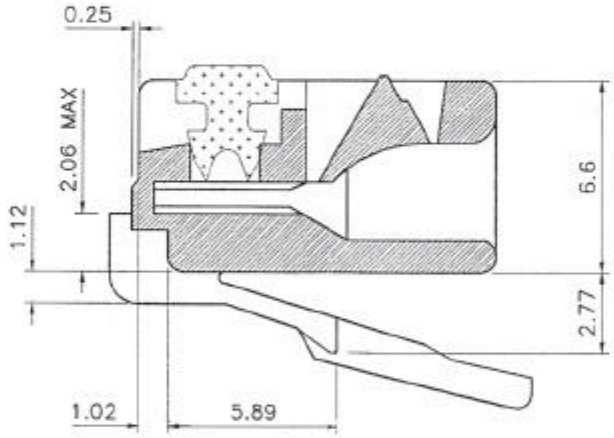

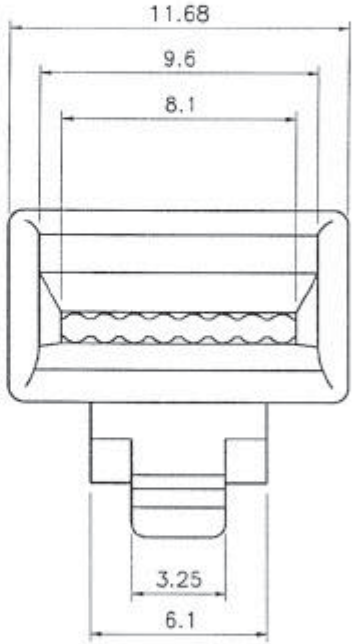

SPECIFICATIONS

- **Material and Finished**

Contact:	Phosphor bronze, 50μ gold plated in contact area over 100μ nickel plated.
Housing:	Polycarbonate, UL94V-0, UL94V-2

- **Electrical Characteristics**

Current Rating:	1.5 Amps
Voltage Rating:	30VAC / 42VDC
Dielectric Withstanding:	1000V Rms, 1 Min (60HZ)
Insulation Resistence:	500 Megohms

NOTE TOL: ± 0.1m/m

RoHS COMPLIANT

UNIT m/m	DSGN	SUNNY	07.DEC.95	ITEM NO: MP8P8C-50-S-1-N
	CHK			PART NUMBER 060-F88-T/S-50-SB
SCALE 4/1	APPR			
DWG NO:	TNT Tri-Net Technology / U.S.A.			