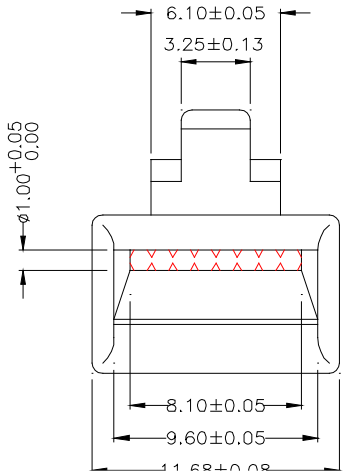

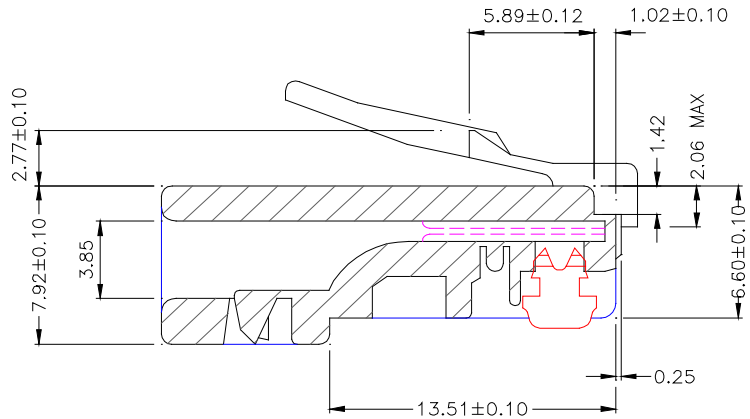

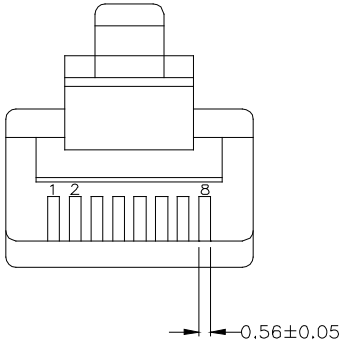

NOTES:

1. ALL DIMENSIONS ARE"MM".
2. ELECTRICAL:
   UL APPLICATIONS: 250 VOLTS AC MAX. , AT 2 AMPS. DIELECTRIC WITHSTANDING VOLTAGE: 500 VOLTS AC.
   INSULATION RESISTANCE: 500 MEGOHMS.
   TERMINATION RESISTANCE: 35 MILLIOHMS MAX
   AFTER ENVIRONMENTAL TESTING.
3. MECHANICAL:
   CABLE-TO-PLUG TENSILE STRENGTH: 20 lbs (89N)MIN
   DURABILITY: 200 MATING CYCLES.
4. MATERIAL & FINISH:
   HOUSING: POLYCARBONATE , VL94-2.
   CONTACT: HIGH STRENGTH COPPER ALLOY.
   6u" GOLD PLATING OVER 100 MICRO INCH NICKEL..

CONDUCTOR: SOLID. 24. 26. 28 AWG.

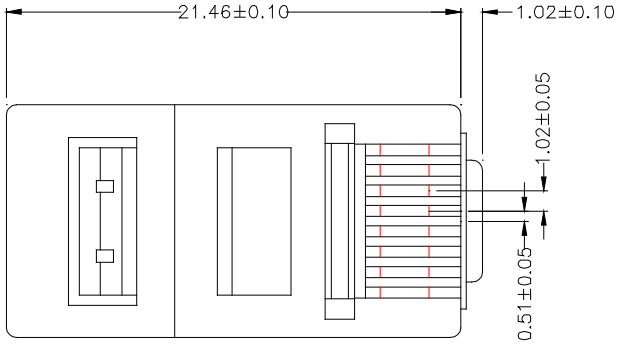

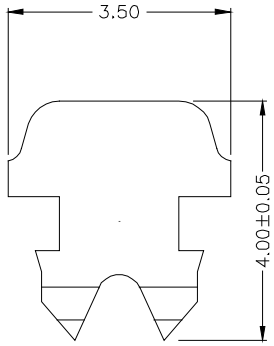

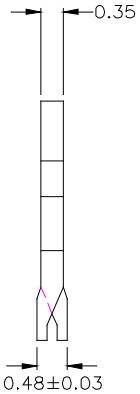

Tri-Net Technology, Inc.
Total Network Telesis U.S.A.

ITEM NO :	060-F88-S-6		
DSGN	S.NIKO	UNIT	m /m
CHK		SCALE	3 /1
APPR		DATE	02/02/2009