REVISIONS				
ZONE	REV	DESCRIPTION	DATE	APPROVED

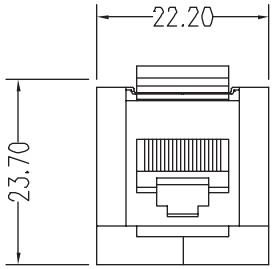

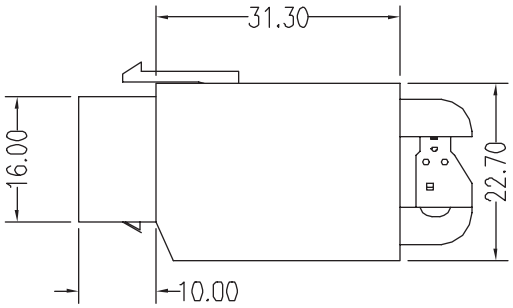

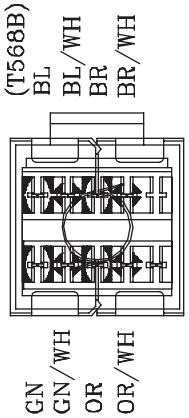

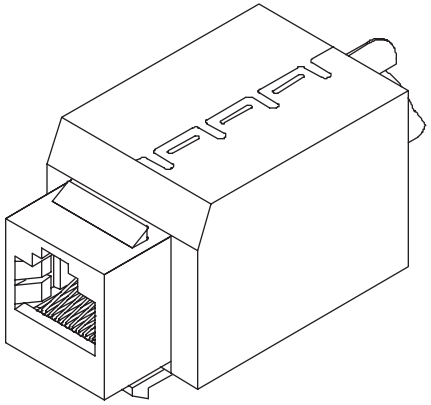

CAT.5e
UL CERTIFIED

ACCORDING TO TSB-40A
REQUIREMENTS
FILE NO.E145249

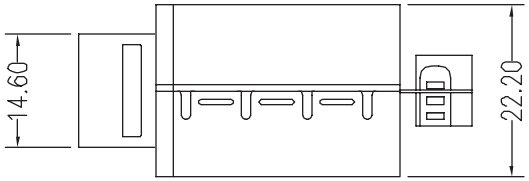

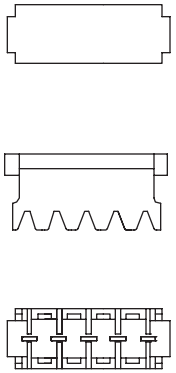

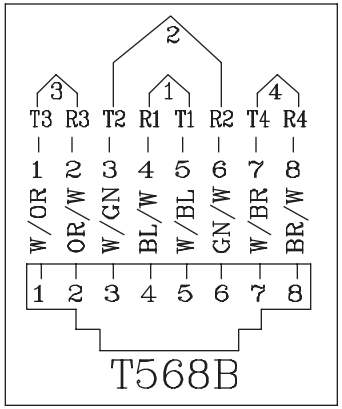

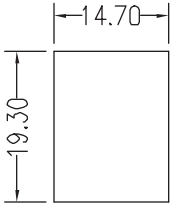

SUGGESTED PANEL
CUTOUT

PHYSICAL SPECIFICATIONS:

PLASTIC: UL 94V-0 THERMOPLASTIC

JACK WIRE: 50u"GOLD PLATING OVER 100u"NICKEL UNDER PLATE

COMMON TOLERANCE		
CLASS / DIMENSION	A	B
L<=3	±0.05	±0.1
3<L<=6	±0.05	±0.1
6<L<=16	±0.1	±0.15
16<L<=30	±0.1	±0.2
30<L<=120	±0.15	±0.3
120<L<=315	±0.2	±0.5

SHEET OF	ALL COPY RIGHTS RESERVED	
SIZE A4	Tri-Net Technology/USA	
DIA mm	PART NUMBER 07E-I88-BK	
SCALE		
DATE AUG.20.02	DRAWING NO. K-037-1	
DESIGN	DRAWN	CHECKED