REVISIONS—ORIGINAL ISSUE SYMBOL A				A
ZONE	LTR	DESCRIPTION	DATE	APPROVED
	A	FIRST RELEASE	1/30/98	SDB

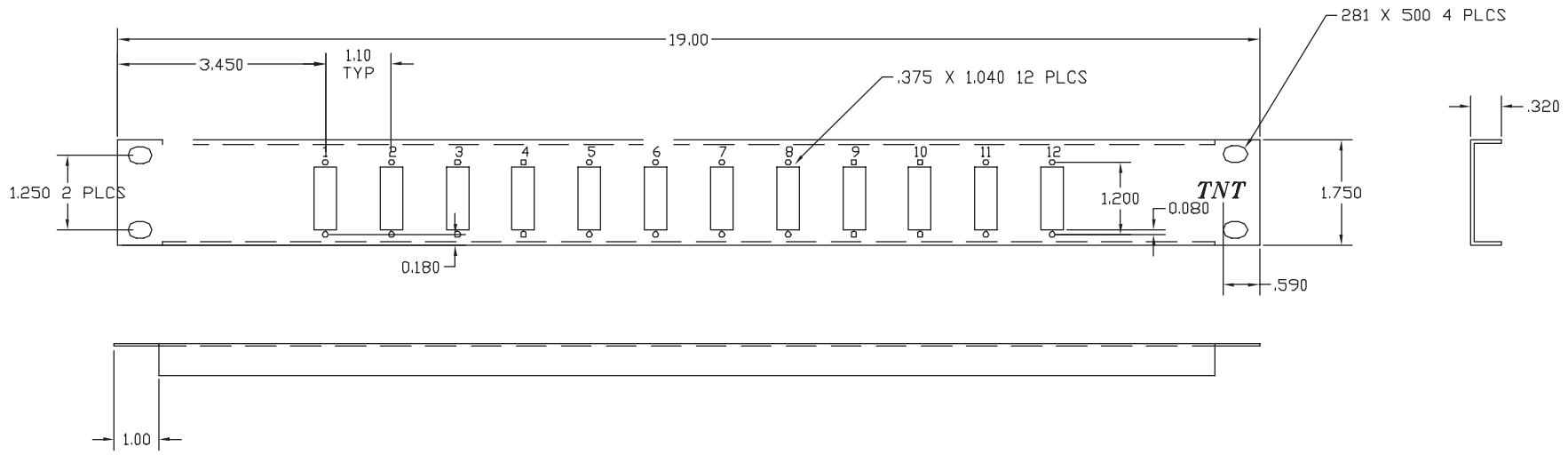

				X
				X
				X
X	X	X	X	DASH #

The information contained herein is proprietary and is not to be released or reproduced without written permission of SDB & ASSOCIATES.

TOLERANCES

Unless Otherwise Specified

Basic Dim	.XX	.XXX	Angles
0 Thru 6	± .030	± .010	±1/2°
6 Thru 24	± .030	± .010	
over 24	± .030	± .015	

MATERIAL	S.R.D #
16 GA CRS	

DWG APPROVAL	DATE
DWN	
CHK	
MGR	
ENG	

NEXT ASSY	USED ON

FIRST APPLICATION

RoHS COMPLIANT

TRI-NET TECHNOLOGY

TITLE

12 PORT SC PANEL

SIZE	CODE	DRAWING NUMBER	REV
D		*891-DSC-12*	A

SCALE 1/1 SHEET 1 OF 1

2. SILKSCREEN WHITE 15 PT CHARACTERS

1.PAINT BLACK SEMI-GLOSS SMOOTH