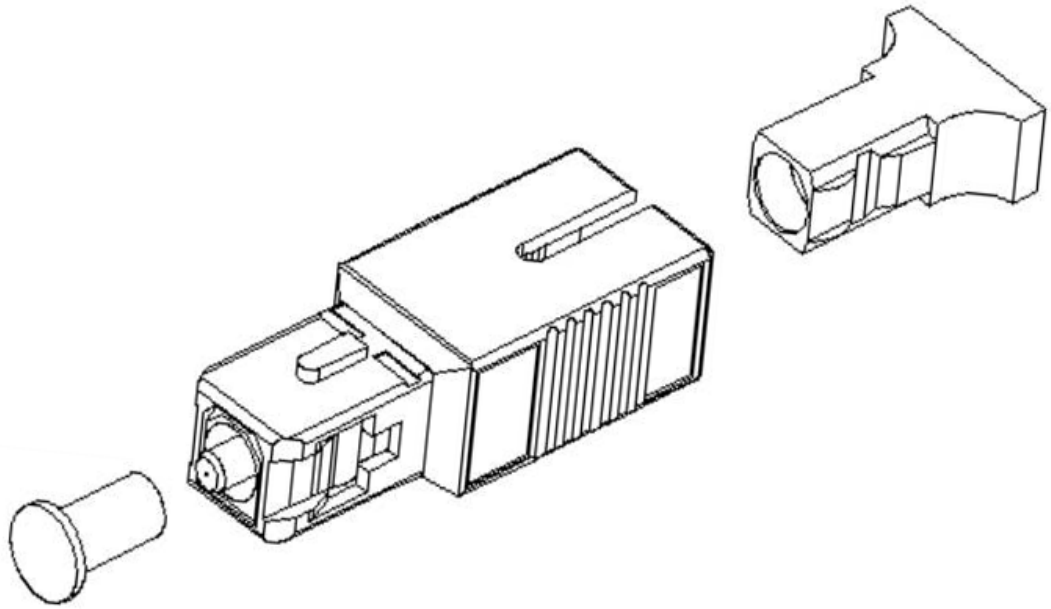

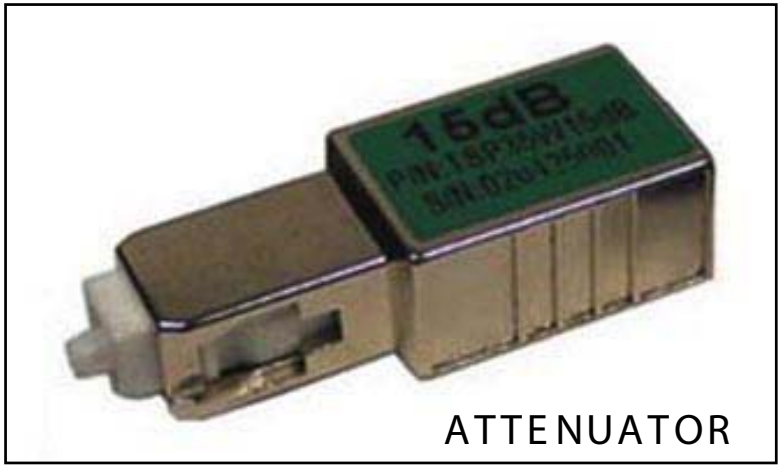

ATTENUATOR

FEATURES

- Attenuation Stability
- Environmental Stability
- Easy Installation & Well Package
- Low Return Loss

APPLICATIONS

- Local Area Networks
- Test Equipment
- Telecommunications
- CATV
- Fiber to the Home

SPECIFICATIONS

Attenuation:	Unit	1~2dB	3dB	4dB	5~10dB	11~30dB
1310/1550+/-40mm	dB	+/-0.5	+/-0.6	+/-0.8	+/-1	+/-10%
Bandpass:						
*Narrow Band	mm			+/-20		
*Wide Band	mm			+/-40		
Fiber Type:				Coactive Attenuator Fiber		
Return Loss (min)	dB			45(PC), 50(SPC), 55(UPC), 65(APC)		
Operating Temperature	°C			-40 to +75°C		
Storage Temperature	°C			-55 to +85°C		

ENVIRONMENTAL TEST:

Attenuators are per BELLCORE'S "GR-910-CORE" requirement in the test of

- Operating Environment
- Water Emersion Test
- Durability
- Non-operating Environment
- Vibration Test
- Impact Test

RoHS COMPLIANT

SHEET: 1 OF 1	ALL COPY RIGHTS RESERVED
SIZE: LTR	TNT Tri-Net Technology, Inc./U.S.A.
DIA:	870-SC-MF-S-XX
SCALE:	
DATE: 033002	www.trinetusa.com
Design: CN	DRAWN: AN / CHECKED: SC