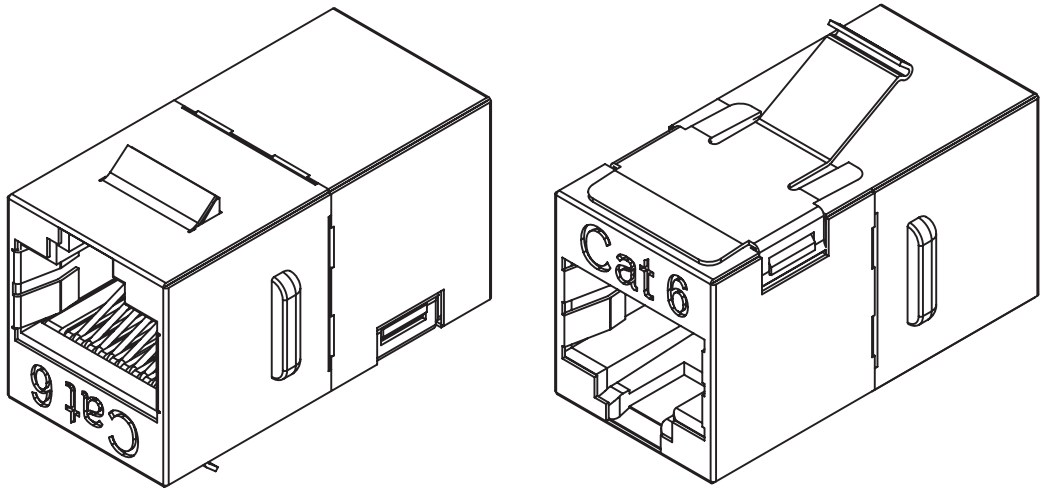

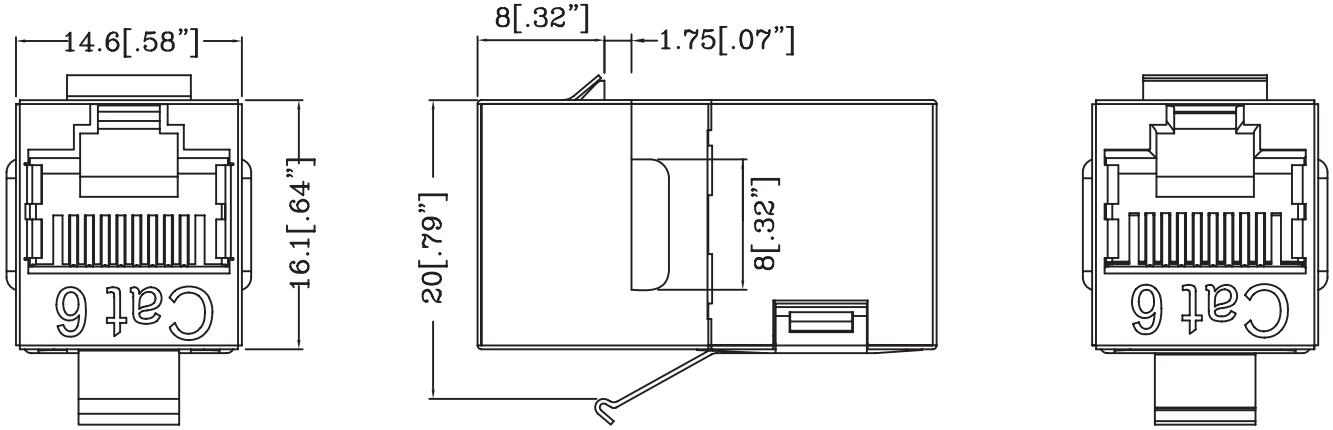

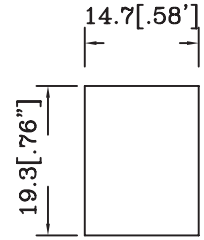

SUGGESTED PANEL CUTOUT

PLASTIC: ABS UL 94V–0 BLACK, STAINLESS STEEL SHIELDED
JACK WIRE: PHOSPHOR BRONZA, 50u” PLATING OVER 100u” NICKEL UNDER PLATE.

RoHS COMPLIANT

SHEET 1 OF 1	ALL COPY RIGHTS RESERVED	
SIZE A	Tri-Net Technology/USA	
MEA. mm[INCH]		
DATE:09/29/08	PART NUMBER	
DWG NO.A0301	080–88S–SI–C6–SH–R	
SCALE: NONE	DRAWN BY EVA	CHECKED BY DANNY