REVISIONS				
ZONE	REV	DESCRIPTION	DATE	APPROVED

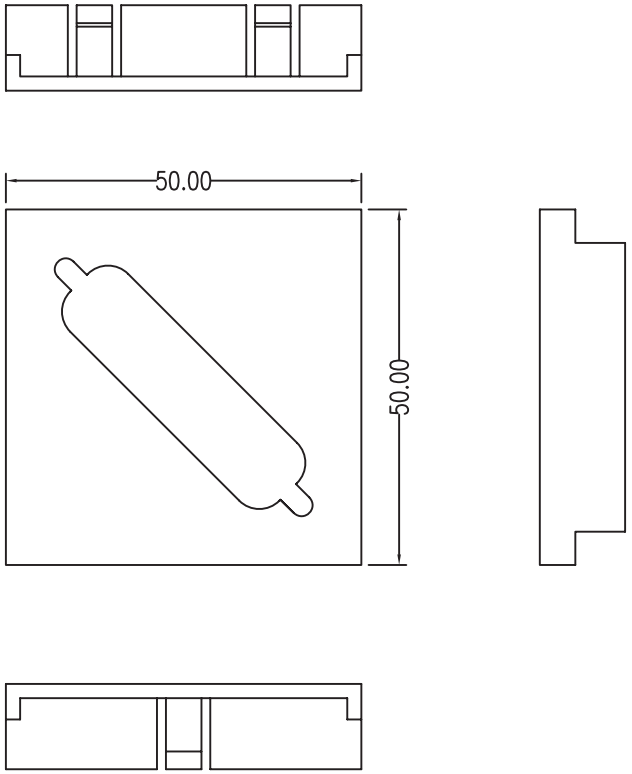

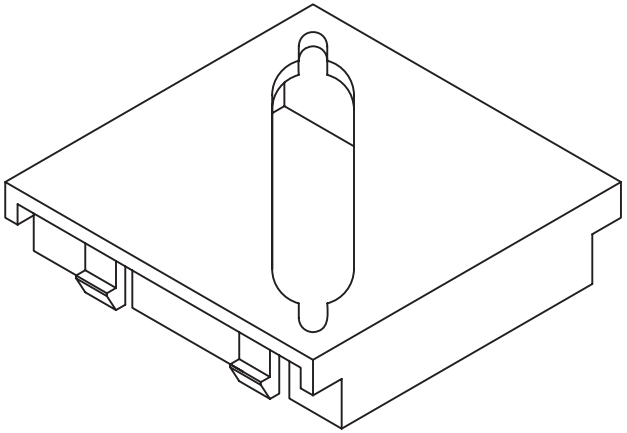

MATERIALS: ABS UL94V-0
COLOR: WHITE
OPTIONS: IVORY.....

RoHS COMPLIANT

COMMON TOLERANCE		
CLASS / DIMENSION	A	B
L<=3	±0.05	±0.1
3<L<=6	±0.05	±0.1
6<L<=16	±0.1	±0.15
16<L<=30	±0.1	±0.2
30<L<=120	±0.15	±0.3
120<L<=315	±0.2	±0.5

SHEET 1 OF 1

SIZE A4

DIA mm

SCALE

DATE MAR.25.99

DESIGN

ALL COPY RIGHTS RESERVED

Tri-Net Technology, Inc.
Total Network Telesis U.S.A.

TITLE
072-SIP-D25-XX

DRAWING NO.
S-017

DRAWN

CHECKED