REVISIONS				
ZONE	REV	DESCRIPTION	DATE	APPROVED

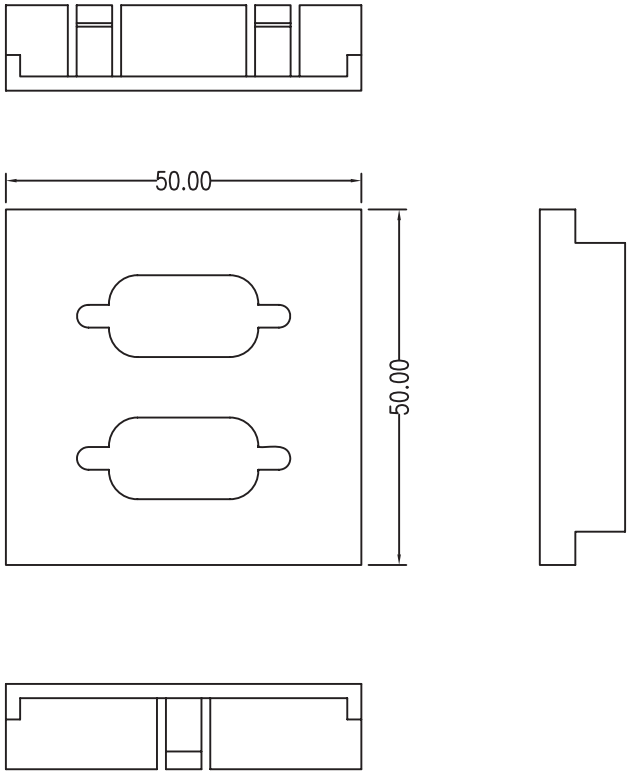

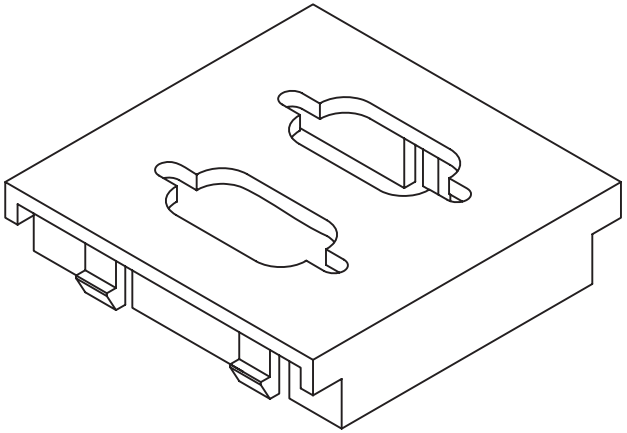

MATERIALS: ABS UL94V-0
COLOR: WHITE
OPTIONS: IVORY.....

RoHS COMPLIANT

COMMON TOLERANCE		
CLASS / DIMENSION	A	B
L<=3	±0.05	±0.1
3<L<=6	±0.05	±0.1
6<L<=16	±0.1	±0.15
16<L<=30	±0.1	±0.2
30<L<=120	±0.15	±0.3
120<L<=315	±0.2	±0.5

SHEET 1 OF 1	ALL COPY RIGHTS RESERVED	
SIZE A4	Tri-Net Technology, Inc. Total Network Telesis U.S.A.	
DIA mm	TITLE 072-SIP-D09-XX	
SCALE		
DATE MAR.25.99	DRAWING NO. S-015	
DESIGN	DRAWN	CHECKED