REVISIONS				
ZONE	REV	DESCRIPTION	DATE	APPROVED
	1			

UL CERTIFIED
FILE NO.E145249

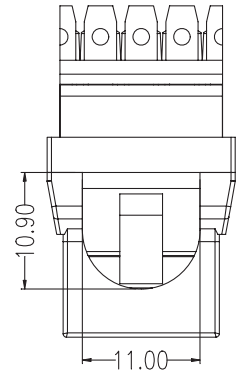

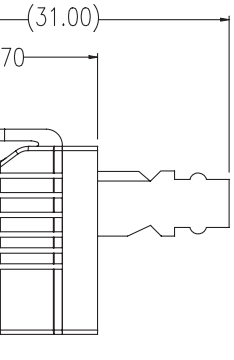

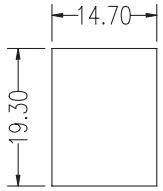

SUGGESTED PANEL CUTOUT

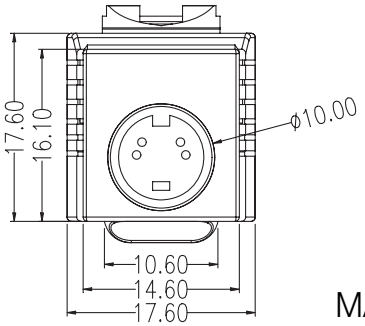

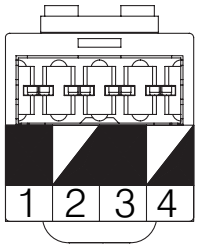

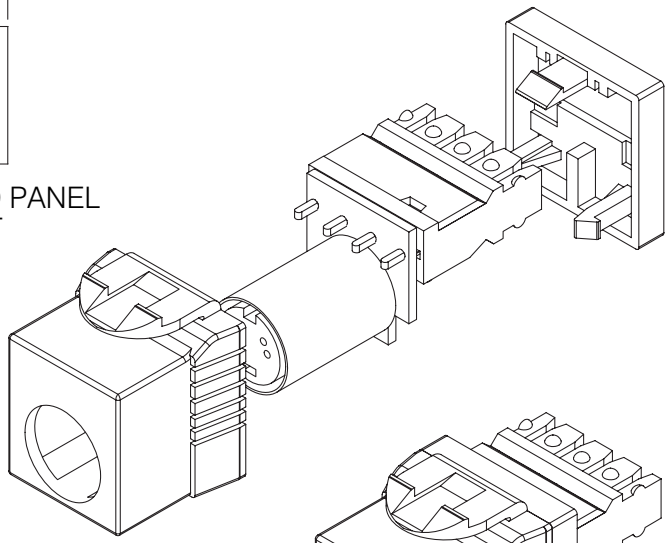

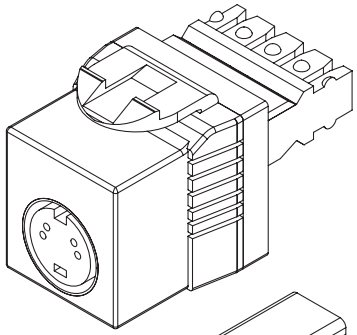

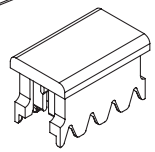

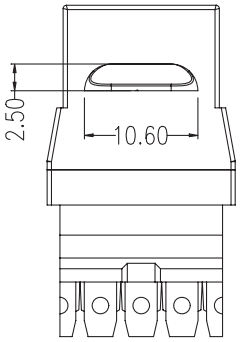

MATERIAL

Housing: PC, UL 94V-0
IDC plastic: PC, UL 94V-0
IDC contact: Phospher Bronze with 200u"
Tin over 100u" Nickel undercoat
Idc block:200 termination cycles
DIN plastic: PBT, UL 94V-0
DIN contact: copper alloy
DIN shell: copper alloy
DIN contact plating: selective gold over nickel plated
DIN shell plating: nickel over copper plated
DIN CYCLES:1500 cycles min.
Temperature: -40°C ~ 68°C

DIN ELECTRICAL CHARACTERISTICS

Current rating: 1 Amps
Insulation resistance: 1000 MEGOHM MIN.AT500V
Contact resistance: 25 mOhm
Dielectric withstanding voltage: 1000 V AT 1 MINUTE

ENCLOSURE:
110C-4CAP X 1 PCS

RoHS COMPLIANT

COMMON TOLERANCE			SHEET OF	ALL COPY RIGHTS RESERVED
CLASS / DIMENSION	A	B	SIZE A4	Tri-Net Technology, Inc. Total Network Telesis U.S.A.
L<=3	±0.05	±0.1	DIA mm	TITLE 071-MDIN4-110-XX
3<L<=6	±0.05	±0.1		
6<L<=16	±0.1	±0.15	SCALE 3:2	
16<L<=30	±0.1	±0.2	DATE 2003.10.27	DRAWING NO. K-106
30<L<=120	±0.15	±0.3		
120<L<=315	±0.2	±1	DESIGN	DRAWN / CHECKED