REVISIONS				
ZONE	REV	DESCRIPTION	DATE	APPROVED

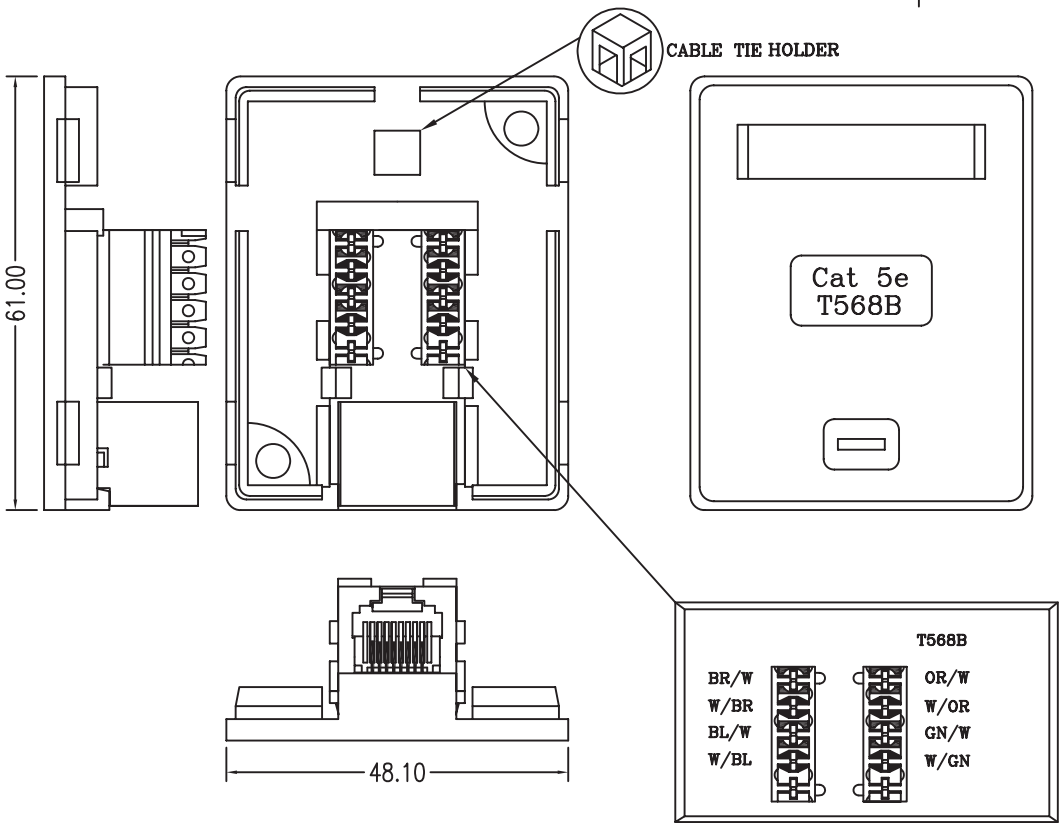

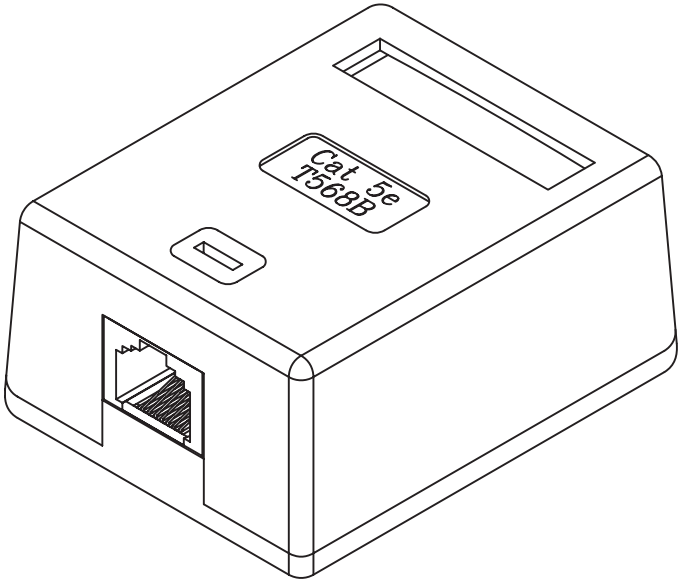

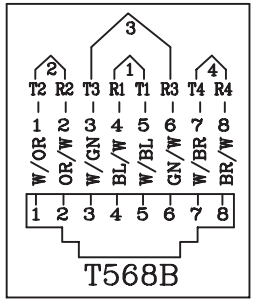

MATERIALS: ABS UL94V-0
COLOR: WHITE
OPTIONS: IVORY GREY.....
ENCLOSURE: 1105 CAP X 2
NYLON CABLE TIE X 1
DOUBLE STICKER X 1 (55 X 45 mm)
K5 6X20 mm SCREW X 2
WHITE PAPER X 1
CLEAR COVER X 1

Cat 5e
UL CERTIFIED
ACCORDING TO TSB-40A
REQUIREMENTS
FILE NO.E145249

COMMON TOLERANCE		
CLASS / DIMENSION	A	B
L<=3	±0.05	±0.1
3<L<=6	±0.05	±0.1
6<L<=16	±0.1	±0.15
16<L<=30	±0.1	±0.2
30<L<=120	±0.15	±0.3
120<L<=315	±0.2	±0.5

SHEET 1 OF 1	ALL COPY RIGHTS RESERVED	
SIZE A4	Tri-Net Technology,Inc. http://www.trinetusa.com	
DIA mm	TITLE 074-S-01-WH-258A	
SCALE		
DATE 01/20/2009	DRAWING NO. A1-005-2	
DESIGN	DRAWN	CHECKED