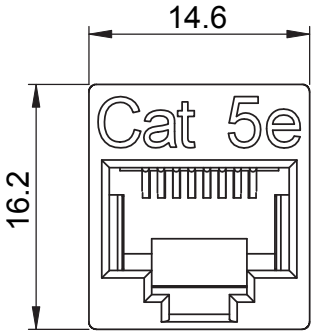

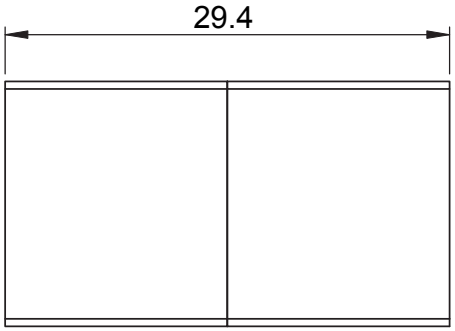

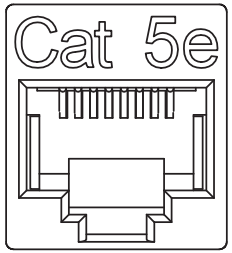

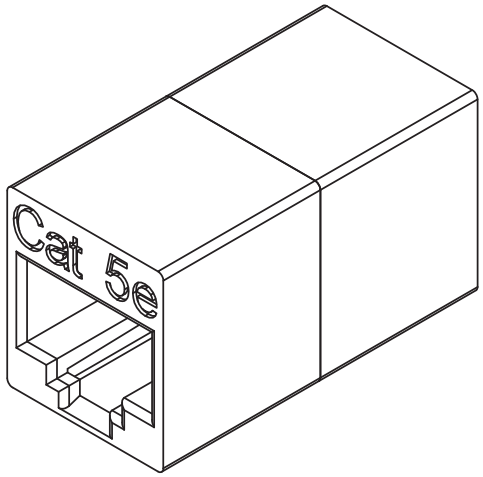

MATERIAL

COUPLER HOUSING : ABS high-impact UL94V-0 thermoplastic
SPRING WIRE : Phosphor Bronze 5100W temper wire, φ=0.45mm, 50u" Gold over 100u" Nickel undercoat
CONTACT HOLDER : ABS high-impact UL94V-0 thermoplastic

PHYSICAL CHARACTERISTICS

INSERTION LIFE : 750 MATING CYCLES WITH FCC COMPLIANT RJ-45 PLUG
CONTACT FORCE : 100 GRAMS WITH FCC COMPLIANT RJ-45 PLUG
PLUG RETENTION FORCE : 11 LBF MIN.
OPERATING TEMPERATURE RANGE : -10°C TO 60°C
STORAGE TEMPERATURE RANGE : -40°C TO 68°C
HUMIDITY : 10%~90%RH

ELECTRICAL

INSULATION RESISTANCE : 500 MΩ
DIELECTRIC WITHSTANDING VOLTAGE : 1000 V
DC CURRENT RATING : 1.5 Amps
DC RESISTANCE : 0.1Ω
CONTACT RESISTANCE : 20mΩ

Cat 5e

c UL us LISTED
56Y4
E145249
COMMUNICATION
CIRCUIT ACCESSORIES

UL VERIFIED
ACCORDING TO
TIA/EIA-568-B-2

Scale	2:1				All Copy Rights Reserved	
3rd Angle Projection					Tri-Net Technology, Inc. Total Network Telesis U.S.A.	
Unit	mm				Title	
Date	2008/3/4				080-RJ45-S-C5-WH	
Tolerance						
~20	~50	~150	150~	ANGLE	Drawn by	Checked by
±0.2	±0.4	±0.5	±1.5	±2°	George	