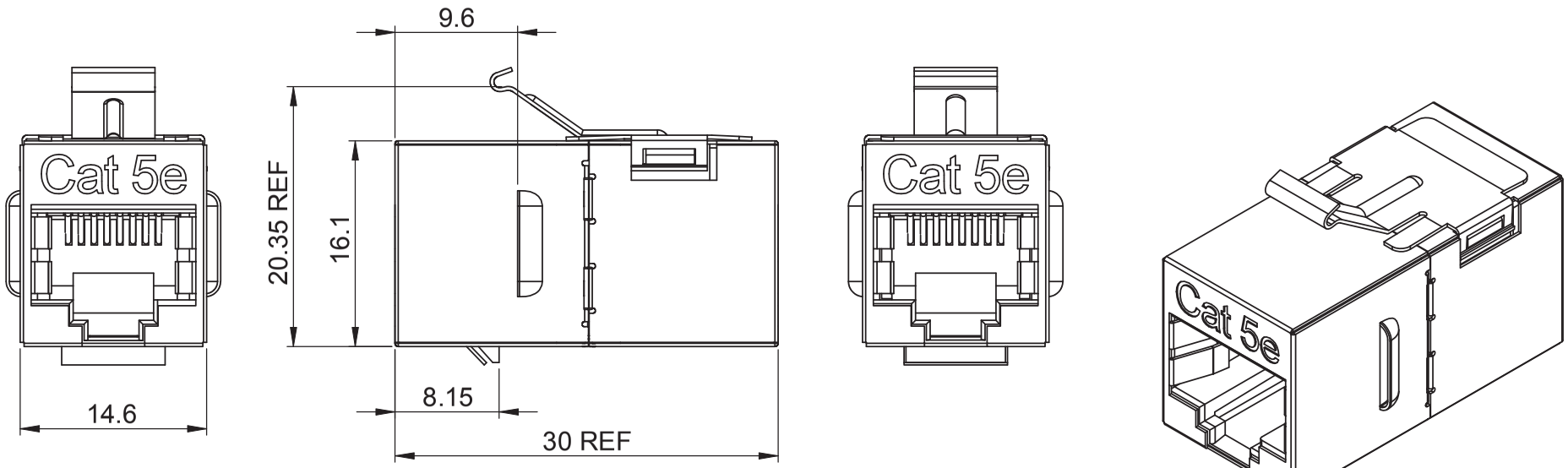

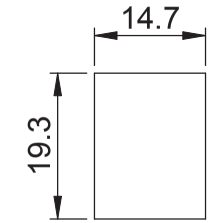

SUGGEST PANEL CUTOUT

Cat 5e

56Y4
E145249

c UL us LISTED
COMMUNICATION CIRCUIT ACCESSORY

UL VERIFIED
ACCORDING TO TIA/EIA-568-B-2

RoHS

MATERIAL

SHIELDED CASE : Copper C2680, t=0.25mm, 30u" Nickel plated
BRACKET : SUS304
COUPLER HOUSING : ABS high-impact UL94V-0 thermoplastic
SPRING WIRE : Phosphor Bronze 5100W temper wire, φ=0.45mm
50u" Gold over 100u" Nickel undercoat

PHYSICAL CHARACTERISTICS

INSERTION LIFE : 750 MATING CYCLES WITH FCC COMPLIANT RJ-45 PLUG
CONTACT FORCE : 100 GRAMS WITH FCC COMPLIANT RJ-45 PLUG
PLUG RETENTION FORCE : 11 LBF MIN.
OPERATING TEMPERATURE RANGE : -10°C TO 60°C
STORAGE TEMPERATURE RANGE : -40°C TO 68°C
HUMIDITY : 10%~90%RH

ELECTRICAL

INSULATION RESISTANCE : 500 MΩ
DIELECTRIC WITHSTANDING VOLTAGE : 1000 V
DC CURRENT RATING : 1.5 Amps
DC RESISTANCE : 0.1Ω
CONTACT RESISTANCE : 20mΩ

Scale	2:1				All Copy Rights Reserved	
3rd Angle Projection					Tri-Net Technology, Inc. Total Network Telesis U.S.A.	
Unit	mm				Title	
Date	02/04/2009				080-C5E-SI-SH-M-R	
Tolerance						
~20	~50	~150	150~	ANGLE	Drawn by	Checked by
±0.2	±0.4	±0.5	±1.5	±2°	S. Niko	