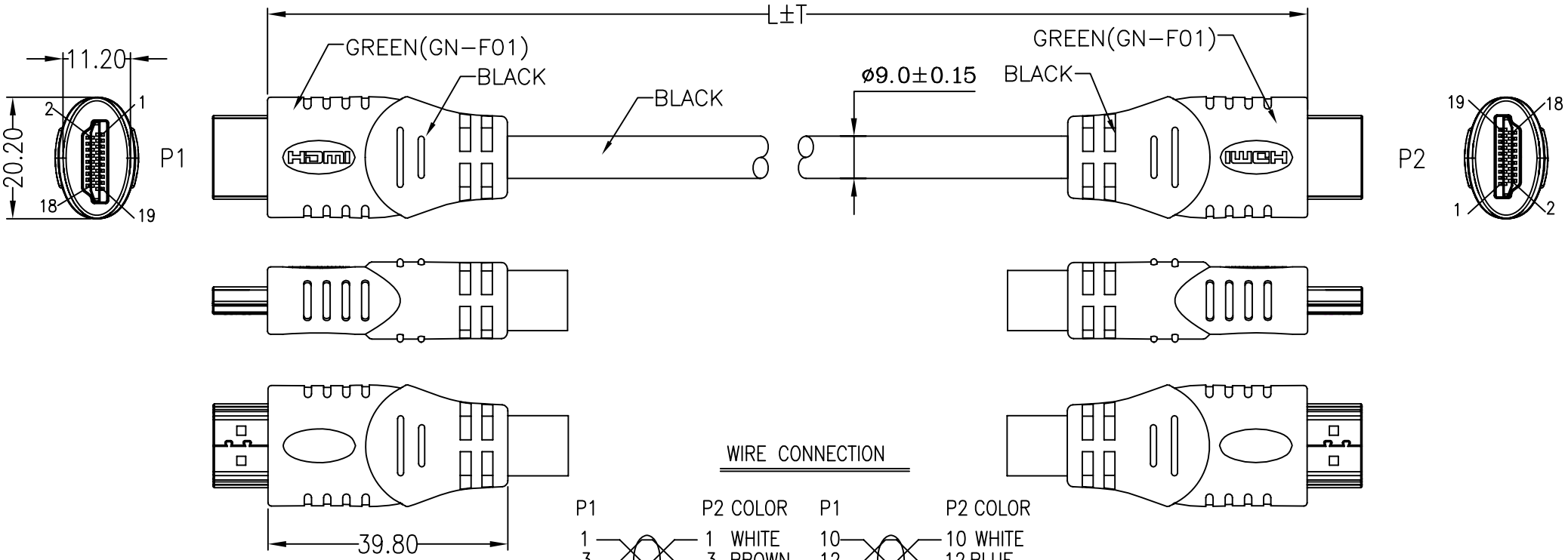

WIRE CONNECTION

P1	P2 COLOR	P1	P2 COLOR
1	1 WHITE	10	10 WHITE
3	3 BROWN	12	12 BLUE
2	2 DRAIN	11	11 DRAIN
4	4 WHITE	13	13 PURPLE
6	6 RED	14	14 RED
5	5 DRAIN	15	15 YELLOW
7	7 WHITE	16	16 ORANGE
9	9 GREEN	17	17 PINK
8	8 DRAIN	18	18 GRAY
		19	19 WHITE
		SHELL	SHELL BRAID

APPROVED BY

COMPANY: _____

PURCHASING/ENGINEER: _____

DATE: _____

NOTE:

1.CABLE:HDMI1.3 UL20276 (24AWG*1P+AL+D+MYLAR)*4C +24AWG*1P+24AWG*5C+AB JACKET COLOR:BLACK OD:9.0±0.15mm.

2.CONNECTOR:P1&P2:HDMI 19P MALE,SOLDER TYPE,GOLD 30U" PLATED CONTACTS, INSULATION:BLACK,GOLD PLATED SHELL.(PCB TYPE)

3.ALL HOOD:MOLDED 45P PVC.

4.MOLD NO.:HDMI-2C-N03,HDMI-2C-03/04.

REV	DESCRIPTION OF CHANGE	DATE
A	INITIAL RELEASE	11/07/07

TOLERANCE INCHES		M/M
.X	.015	.30
.XX	.010	.10
.XXX	.005	.05

Tri-Net Technology,Inc.
http://www.trinetusa.com

SCALE	NONE	REV	A
UNIT	MM		
SHEET	1/1	DWG NO.	
DATE	11/07/07		

DRAWN BY	Walt
CHECK BY	
APPD BY	

TITLE: HDMI19P TO HDMI19P

PART NO. E103-HDMI-HDMI-GN/BK-XX-24AWG

RoHS COMPLIANT

P/N	L(FT)	T(INCHES)
E103-HDMI-HDMI-GN/BK-150-24AWG	150	+12/-6

QP-05-02-G